astor bannerman
beyond routine

OpeMed
OT200

User Guide:
Astor OT 200 Ceiling Hoist



Astor Bannerman
www.astorbannerman.co.uk
+44 (0)1242 820820

Index Page

1 OT200 Compact Ceiling Hoist Manual - Introduction 4
1.1 About this Manual 4
1.2 Symbols 4
1.3 Contents of the Package 4
1.4 The OT200 Ceiling Hoist 5
1.5 Points of Attention 6

2 Description 7
2.1 Charging and Life-Span of the Batteries 8
2.2 Capacity 8
2.3 Emergency Cord (Figure 2 : No 10) 8
2.4 Emergency Control 8
2.5 Control Indicator Lights on the Hoist (Part 11) 9
2.6 Connecting the Hand-Held Control 9
2.7 Connecting the Powered Hanger Bar 9
2.8 Hand-Held Control 9

3 Rail System 10
3.1 XY or H System for Room Coverage 10
3.2 Turntable (Optional) 10
3.3 Gate (with X-Y Systems) 10
3.4 Exchanger or Junction 10

4 Hanger Bar 11
4.1 STANDARD – 2 Point Spreader Bar 11
4.2 OPTIONAL – Manual Cradle 11
4.3 OPTIONAL EXTRA - Powered Cradle 11
4.4 OT400 Hanger Bar 11

5 Slings 12
5.1 Sling Attachment 12
5.1.1 LOOP SLINGS 12
5.1.2 CLIP SLINGS 12

6 Using the OT200 Ceiling Hoist 12
6.1 Lifting From a Chair 13
6.2 Lifting From a Bed 13
6.3 Moving the Patient 13
6.4 Taking the Patient Out of the OT200 / OT400 13
6.4.1 Step 1a Lifting Towards a Bed 13
6.4.2 Lifting Towards a (Wheel) Chair 14
6.4.3 Lifting Towards a Toilet 14

7 Maintaining the OT200 Ceiling Hoist 14
7.1 Cleaning Instructions 14
7.2 Daily/Weekly Maintenance 14
7.3 Annual Inspection and Maintenance 14
7.4 If the OT200 Does Not Function 15
7.5 Disposal 15

8 OT200 Specification 15
8.1 Technical Summary 15

9 Warranty statements 17

10 About OpeMed 17
10.1 Contact Details 17
11 EG - Statement of Conformity 18
12 Notes 19

1 OT200 Compact Ceiling Hoist Manual - Introduction

1.1 About this Manual

The aim of this user manual is to enable carers to operate the OT200 and to instruct them on how to carry out small (preventive) maintenance jobs.

This manual deals with the following aspects related to operating the OT200 and OT400:
- Parts description
- Working principle description
- Step-by-step lifting instructions
- Maintenance of the OT200/ OT400; to be carried out by the carer

Next to this manual the following documentation is available on the OT200:
- Technical manual. The technical manual is developed for the technical service department and contains:
  - maintenance procedures
  - repair procedures
  - parts lists with order numbers
- Installation manual. This manual can be used during the installation of the systems:
  - installation of rail and supports
  - installation of a gate (transition from fixed to mobile rails)
  - installation of carousel
  - part lists with order numbers of all components of the rail system.
- Quick Reference. The Quick Reference guide deals with the main safety and operating aspects relating to the OT200.

1.2 Symbols


Attention


Read the manual before operating the hoist


Attention, High Voltage


The producer of the product


With this, the OT200 meets the European Standard, ISO 10535 and the GQ-quality mark T-02, cluster UTT.

1.3 Contents of the Package

The delivered package must contain:
- Cassette
- Hand-held control
- Charger
- Charging station
- Spreader Bar
- User manual
- Quick reference

Remove the packaging from the OT200 and check the contents of the package.

1.4 The OT200 Ceiling Hoist



The OT200/OT400 is a ceiling hoist for passive transfers of caretakers. The caretaker can be lifted with the OT200 and it is possible to transfer the caretaker by means of a rail that is attached to the ceiling.

The OT200 can be delivered with a mechanical (balanced) or powered hanger bar. The OT200 can also be equipped with an electrical drive for transportation along the rail.

The OT200/OT400 can be used for the following transfers/activities:

- From a (wheel)chair to a bed and vice-versa.
- From a (wheel)chair to a toilet and vice-versa.
- From a (wheel)chair to a shower-bath-toilet chair and vice-versa.
- From the floor to a (wheel)chair or bed.
- For Gait Training and Rehabilitation (with a walking harness sling only).

The OT200 /OT400 complies with the following standards (by KBOH):

- The user can be lifted from a sitting or lying position and will hang in a (semi) sitting position. After transportation of the hoist, the user can be placed back on the supporting element in a sitting or lying position.
- The hoist can be used in combination with wheelchairs, without having to remove foot, leg or arm supports.
- The hoist can be used in combination with an accessible bed, shower window or dressing table at working height. Next to this the hoist can be used for transfers to and from the floor.

With this the OT200 also complies to the demands set by the European Standards, ISO 10535 and the GQ-quality mark T-02, cluster UTT.

Under normal conditions, and with the exception of slings and batteries, the expected life span of the hoist is 10 years (100.000 transfers), provided the hoist is maintained as instructed.
Special circumstances, like using the OT200 in humid environments or environments with aggressive vapours can shorten the life time of the hoist.

1.5 Points of Attention

- The OT200 is designed to lift and transfer caretakers in combination with an appropriate sling, the OT200 can only be used for this purpose. Any other form of use is not allowed.
- It is not allowed to lift more than 200kg (440lbs) with the OT200, unless otherwise stated on the lift. The OT400 can lift 400kg.
- It is not allowed to lift any object (e.g. a chair or wheelchair) together with the caretaker.
- Special caution needs to be taken when the clips of a sling are attached to the hanger bar, incorrectly attaching these clips can cause a fall of the caretaker and lead to severe injuries.
- Always make sure sufficient space is available above the caretaker before lifting.
- Only use the OT200/OT400 in combination with a sling that is delivered by OpeMed. Always contact OpeMed before using alternative slings.
- Treat the lift with care and always make sure the working environment is neat and clean.
- Working with the hoist is only allowed to authorized personnel.
- The OT200/OT400 needs at least once a year a periodical inspection.
- Service and maintenance of the hoist is only allowed to be carried out by authorized personnel.
- Only use original parts (supplied by OpeMed) for repairs or replacements.
- Replacing hanger bars or other constructive parts of the hoist is only allowed to authorized personnel.
- Charging the battery always needs to be done in well ventilated, dry rooms. Battery chargers need to be connected according to the installation demands.
- Battery chargers need a periodical inspection at least once a year.
- Never lift the caretaker higher than necessary.
- When deformations occur to the hoist due to incorrect usage or transport, the hoist should not be used anymore, and will have to be sent back to the supplier.
- Avoid collision into end stops at full speed.
- Move the hoist carefully in order to prevent excessive movements of the caretaker.
- Never leave the hoist unattended while loaded. In energy saving mode (after 10 minutes) the load will be lowered slowly.
- Do not use the hand-held control or the hanger bar wires as towing-lines to move the caretaker as this will damage the wiring.

2 Description

The 'OT200' ceiling hoist system consists of a number of components that are discussed in this handbook. In Figure 1 shows the main components. These are described in a separate section.

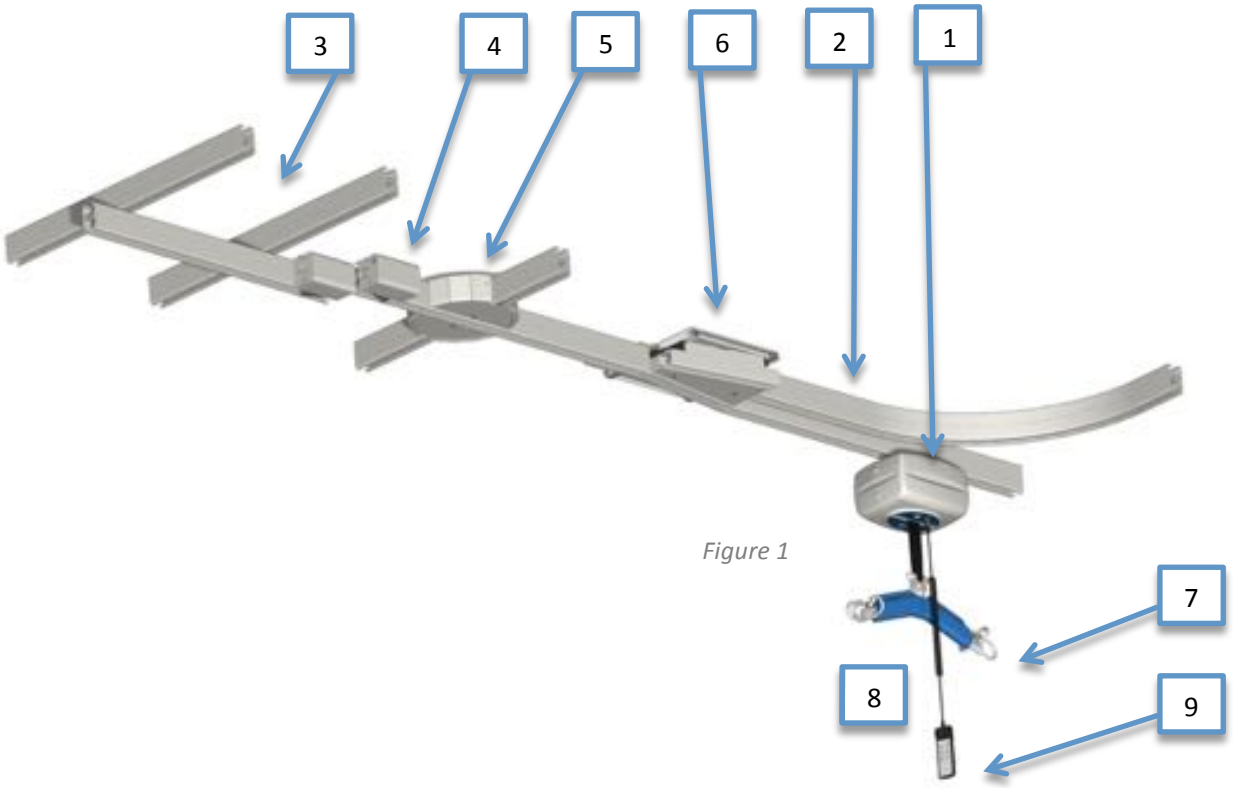

Figure 1

Figure 1

1 OT200 Motor Cassette.....Page 15
2 Rail System .....Page 10
3 X-Y System .....Page 10
4 Gate System.....Page 10
5 Turntable .....Page 10
6 Exchange Junction .....Page 10
7 Spreader Bar .....Page 11
8 Slings.....Page 12
9 Hand Control .....Page 9

Figure 2

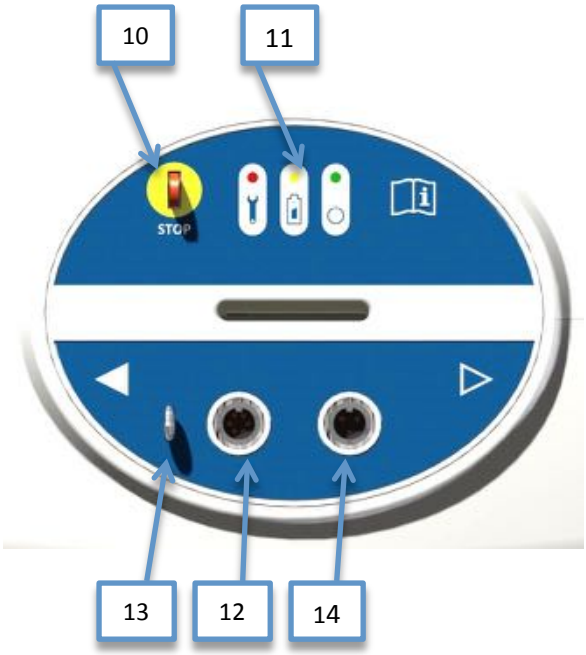

Figure 2

10 Emergency Stop and Lowering
11 Control LED. Green = Hoist in use.
Orange Flashing = Needs charging.
Orange Constant = On charge.
Orange Off = Battery charged.
Red Spanner = Fault
12 Connection point for handcontrol
13 Handcontrol security hook
14 Powered cradle connection point

2.1 Charging and Life-Span of the Batteries

In order to maximize the life span of the batteries, it is advised to put the cassette into the charging station when the cassette is not being used, but the unique Gravity Powered Charging on the OT200 will maximise the battery life of the hoist.
Always charge the battery when the yellow battery indicator is blinking.



Charge the batteries according to the following procedure:
- Make sure the charger is connected to the electricity supply.
- The red/amber/green indicator on the charger will light up depending on the state of the battery.
- Place the cassette below the charging strips (box on side of rail with two metal springs)
- After several seconds charging will start automatically and the yellow indicator on the cassette will light when charging and go-out when fully charged. The light on the charger will either show red/amber/green depending on the state of the batteries.
- Allow for a charging time of 6-8 hours.

2.2 Capacity

The number of lifting cycles that can be done with a fully charged battery depends on the time per lifting cycle, the lifted weight and the age and condition of the battery. The OpeMed Gravity Powered Charging will maximise the lifecycle of the battery.

2.3 Emergency Cord (Figure 2:10)

By pulling the red emergency cord the hoist will immediately stop moving. The emergency stop is (de)activated as follows:

Activate emergency stop (figure 2:10) Pull the emergency cord.

De-activate emergency stop (figure 2:10). Press the red lip to which the cord is attached back into the cassette. After this the cassette will function as normal.

Do not use the emergency cord as an on-off switch. Reactivating the cassette is done with the red lip which is close to the ceiling. The cassette will automatically turn off when it has not been used for more than 10 minutes.

2.4 Emergency Control

(Only to be used in the case of an emergency)
The emergency control can only be used when there is no other way to get the caretaker out of the hoist. The emergency control uses spare power that is available in the battery. The emergency control can only be used to lower a caretaker and is controlled by pulling the emergency cord. As long as the cord is being pulled down the hoist will keep lowering the caretakers.
The OT200 is also equipped with several other safety systems. Examples are the rewind guard and a slack belt guard. A detailed description of these safety systems can be found in the technical manual.

2.5 Control Indicator Lights on the Hoist (Figure 2:11)

Green indicator on-off
The green indicator will light up when the cassette is activated. The cassette will automatically deactivate when it has not been used for 10 minutes. The green indicator will dim. The cassette will automatically reactivate when the hand-held control is being used.

Orange battery indicator
The battery indicator tells when the batteries need to be charged. When this indicator starts to blink, the batteries will have to be charged following the description in paragraph 2.1. When the hoist is being lowered while loaded, the battery will charge and therefore the orange indicator will light up.

Red failure indicator
When the red failure indicator lights up there is a failure inside the cassette. Immediately alarm your technical service department.

2.6 Connecting the Hand-Held Control

The plug of the hand-held control has to be connected to the cassette by screwing the threaded plug into the cassette (Figure 2:12).

2.7 Connecting the Powered Hanger Bar

When the cassette is equipped with a powered hanger bar, the threaded plug of the hanger bar has to be screwed into the cassette (Figure 2:14). When the hanger bar is connected correctly it can be controlled with the hand-held control.



2.8 Hand-Held Control



Do not use the hand-held control as a towing line! Stand behind the caretaker and steadily push him or her along the rail. The hanger bar can be used as a handle for transfers.

The OT200 is operated with either a hand-held control or the optional infra-red hand control. This control is used to:

- Move the hoist up or down.
- Bring the hanger bar from a lying position into a sitting position (only with powered hanger bar).
- Move the cassette along the rail (only with powered drive of the cassette).

3 Rail System



The OT200 is designed to run on the OpeMed or approved other supplier's track. The track or rail should always be inspected according to local legislation (e.g. in UK LOLER and EN ISO 10535 inspected every 6 months).

3.1 XY or H System for Room Coverage

An XY rail system is a system where two rails are put, where a movable rail angles below will be hung from the ceiling. The OT200 will charge at the end of the moving rail and the moving rail needs pushing normally to the end of the fixed rail for charging to commence.

3.2 Turntable (Optional)

The system you have chosen might be supplied with a turntable, creating the possibility of running a cassette along more than one rail. A turntable operates automatically and makes a quarter-turn to the left or the right. A full turn is not possible.

Controlling the turntable is simple:



- Place the cassette in the middle of the carousel.
- After approx. 2 seconds the turntable will beep will turn 90 degrees.
- Drive the cassette out of the turntable.
- If you do not want to make a turn but simply pass the turntable, you should not stop the cassette in the carousel.

3.3 Gate (with X-Y Systems)

If your system uses a X-Y system with a transition to a fixed rail (room to room) then a "gate" is placed where the rails join. This gate makes sure that the cassette cannot slide out of the rail when the joints are not alligned. The gate automatically connects the rails and enables a smooth transition from a mobile to a fixed rail. The OpeMed gate is very safe with an electrical and manual security system.

Travelling from fixed rail to X-Y system:



- Move the cassette through the gate toward the mobile rail.
- The rail will de-attach and can be moved.

Travelling from X-Y or H system to a fixed rail:

- Place the cassette in front of the gate.
- Place the rail with the cassette opposite to the other gate. (keep moving slightly)
- The rails will connect and cannot be moved anymore. The guard will open and the cassette can be moved through the gate.

3.4 Exchanger or Junction



This is a more cost effective solution to the turntable if only 3 exits are required (or the track splits). Similar to the turntable the exchanger will operate automatically if you pause the motor in the Exchanger for 2 seconds or more. A sound will bleep and the exchanger junction will move to the other track.

If you want to continue the OT200 without changing tracks simply do not stop when passing through the Exchanger.

4 Hanger Bar

The OT200 is provided with a hanger bar. The hanger bar is a construction to which the sling (in which the caretaker will take place) can be attached. Several types of hanger bars are available, of which the balanced and the powered hanger bar are the most important types. Both hanger bars create the possibility of transporting the caretaker in a sitting or a lying position. The way this is done is described below.

4.1 STANDARD – 2 Point Spreader Bar

For use with loop slings (OpeMed and approved competitors). To operate this please ensure the sling strap (shoulder and leg) are individually placed on the hook with the sprung disc preventing the strap from coming off. An extra hip tape can be used on the 3rd hook on the end of the Spreader Bar





4.2 OPTIONAL – Manual Cradle

A balanced hanger bar is influenced by the caretaker. The caretaker can bring himself/herself into a sitting or a lying position with simple movements. The balanced hanger bar is most efficient when used with caretakers who have sufficient stability in the hip-joint and sufficient body balance. This unique expanding cradle keeps the patient at the centre of gravity and expands and changes shape with the patient as he/she lies down/sits up.

4.3 OPTIONAL EXTRA - Powered Cradle

The powered hanger bar is moved from a sitting to a lying position by means of an actuator on the hanger bar. This enables automatic positioning of the caretaker into the desired position, which has high benefits for caretakers with a low hip-stability. The powered hanger bar is controlled by two buttons on the hand-held control.





4.4 OT400 Hanger Bar

This is a different hanger bar for the OT400 and is re-enforced for the extra capacity. WARNING. Do not use the OT200 hanger bar on the OT400.



Do not use the hanger bar cord as a towing line! This might damage the wiring. Stand behind the caretaker and steadily push him or her along the rail. The hanger bar can be used as a handle for transfers.

5 Slings

5.1 Sling Attachment



- Read the sling guidelines carefully before using the sling. It is ESSENTIAL that you fully understand how to attach the sling in the correct way. Always check the sling for signs of wear or damage before use.
- Always complete a risk assessment and check the capacity of the sling as well as the hoist. The lower SWL should be the one adhered to.
- Never use a loop sling on the Manual Cradle (4.2) or the Powered Cradle (4.3). These are designed for Clip Slings Only.
- Never use a Clip sling on the Standard 2 point Spreader Bar. These are designed for approved Loop Slings Only

5.1.1 LOOP SLINGS

- Attach the loop over the hook, taking care that the same length of loop is attached on either side.
- Ensure thee sling is past the safety spring disc and the spring disc is clicked in place to prevent the sling coming off.
- Ensure both leg and shoulder loops are attached (min of 4 loops on any sling).
- Always refer to the sling user guide.
- Always check the weight capacity of the sling and ensure it is not more than the OT200.

5.1.2 CLIP SLINGS (depends on clip sling used – please refer to sling instructions)

- Hold on to the strip on the clip with one hand and pull the large hole in the clip over the attachment point. Check whether the belt on which the sling is hanging is not turned or twisted.
- Take the belt under the clip and pull this down until the clip falls into the secure position.
- The attachment point is now locked into the hole in the top side of the clip.
- Attach all clips in the same way before lifting.

6 Using the OT200 Ceiling Hoist



Check the OT200 on the following points before use:

- Check that status of the batteries on the cassette´s display
- Is the emergency stop de-activated?
- Check whether the used sling fits the purpose and the transfer (see tables page 11 and 12)
- Check the condition of the sling and the clips and whether the whalebones are placed
- Carefully place the sling on the spreader bar
- Is the caretaker able and comfortable to be lifted?
- The cassette will automatically activate when any button on the hand-held control is pushed
- When using a standard sling, always place the arms of the caretaker inside the sling on the caretakers' lap.
- When using a toilet sling always make sure the arms of the caretaker are outside the sling so that the upper slips with clips pass beneath the arms!
- Always work in a neat and clean environment.
- The OT200 is now ready to be used according to the instructions in this manual.
- Always make clear to the caretaker what is happening with every step of the process!
- Pay attention to the danger of getting entangled between the hinging points of the hanger bar.

6.1 Lifting From a Chair

- Place the sling behind the back of the caretaker down to the seat. Let the caretaker sit slightly forward during this handling. Make sure the sling is placed with the washing instructions facing to the outside.
- Pull the leg slips slightly forward, this way the caretaker already sits 'inside' the sling.
- Lift one of the caretaker's legs and bring one leg slip of the sling to the inside of the leg. Use the same method to apply the other leg slip.
- If necessary, pull the head side of the sling up to the correct height. The sling will now fit around the caretaker like a 'tank chair'.
- When using a toilet sling apply the circular belt (leg-side) like a belt around the waist of the caretaker. Put the arms of the caretaker through loops on the head-side of the sling.



Toilet slings can only be used with caretakers with sufficient shoulder functioning and body stability.

6.2 Lifting From a Bed

- Roll-up one slide of the sling for about half the total width of the sling.
- Roll the caretaker over on one side, facing the carer.
- Put the sling with the rolled-up side against the back of the caretaker.
- Make sure the sling is placed with the washing instructions facing to the outside (currently the down side).
- Roll the caretaker over the sling onto his/her other side.
- The rolled-up part of the sling will now be on the side of the carer.
- Unroll the rolled-up part of the sling and pull this to the correct position.
- Roll the caretaker back on his or her back, making sure he or she is now lying on the sling.
- Lift one of the caretaker's legs and bring one leg slip of the sling to the inside of the leg.
- Do the same with the other leg slip.
- If necessary straighten the sling in order to make sure the caretaker will lie stable during lifting.

6.3 Moving the Patient



Do not use the hand-held control as a towing line! This might damage the wiring. Stand behind the caretaker and steadily push him or her along the rail. The hanger bar can be used as a handle for transfers.

- Lift the patient by means of the hand-held control.
- While moving, walk with the lift. Stay as close to the caretaker as possible.
- Approach the bed, chair or toilet and then determine the required height for bringing the caretaker to the final position.
- Never lift the patient higher than absolutely necessary during a transfer.

6.4 Taking the Patient Out of the OT200 / OT400

6.4.1 Step 1a Lifting Towards a Bed

- Bring the caretaker into a lying position. Position the patient as good as possible above the bed.
- Lower the caretaker onto the bed until he or she completely lies flat on the bed.
- Undo the clips of the sling from the hanger bar and remove the hoist.
- Always use a special bath sling when lifting towards a bath.

6.4.2 Lifting Towards a (Wheel) Chair

- Make sure the brake of the wheelchair is applied.
- Lower the patient into the chair at low speed.
- Make sure the patient is properly positioned into the back of the chair.
- Undo the clips of the sling from the hanger bar and remove the hoist.

6.4.3 Lifting Towards a Toilet

- Follow the same instructions as when lifting to a chair.
- Always us a toilet sling when lifting to a toilet.
- Lower the caretaker's pants to the knees before placing the caretaker on the toilet. Further lower the pants after placing the caretaker on the toilet.
- Undo the toilet sling from the attachment points of the hanger bar while using the toilet.
- Raise the caretakers pants after the toilet use again to the knees, lift the caretaker and fully raise the pants.



Toilet slings can only be used with caretakers with sufficient shoulder functioning and body stability.

7 Maintaining the OT200 Ceiling Hoist



If any doubt occurs about the condition or functioning of the OT200 always alarm the technical service department.

OpeMed hoists should **ONLY** be serviced by an authorised OpeMed partner or OpeMed themselves. Failure to do this will invalid the warranty.

7.1 Cleaning Instructions

Cassette and hanger bar-	The best way to clean the OT200/OT400 is with a moist cloth. Use normal (house) cleaning detergents.
Slings -	Always see washing instructions attached to sling. Do not use aggressive solvents when cleaning the hoist or the slings.

7.2 Daily/Weekly Maintenance

For normal use the OT200 hardly requires maintenance. We do however advice to pay attention to the following points daily in order to prevent or recognize problems in time.

Action	**Remark**
Clean the hoist:	See cleaning instructions paragraph 7.1
Wash the slings:	See washing instructions on sling.
Charge the batteries regularly:	Make sure the cassette is in the charger when the hoist is not being used.
Check whether the hoist operates smooth:	Alarm the technical service department in order to let them grease or change parts that hinder smooth operation.
Check for irregular sounds:	Alarm the technical service department

7.3 Annual Inspection and Maintenance

The hoist needs to be checked once a year according to the local-guidelines (UK LOLER every 6 months). This needs to be done by OpeMed or another OpeMed authorized institution. OpeMed offers you the possibility of an annual inspection by means of a Service Agreement.
If maintained by an authorised person the OT200 hoist should have a sticker tells you when the hoist is due for inspection. For more information about inspections you can always contact OpeMed.

7.4 If the OT200 Does Not Function

- Check whether the emergency cord is pulled out
- Check whether the batteries are sufficiently charged.
- Check whether the plug of the hand-held control is connected correctly.
- Check whether the plug of the hanger bar control is connected correctly.
- Check whether the belt is slack, if necessary tighten it.
- Check whether the belt has been pulled up too much, the hoist will only go down.
- Check whether the belt has been rolled out too much, the hoist will only go up.
- If the hoist is still not working, alarm the check technical service department.

7.5 Disposal

For disposal the OT200 can be returned to OpeMed. This is also possible with batteries, chargers, slings etc. If you choose to dispose the batteries yourself, be aware of the fact that these batteries are chemical waste.

8 OT200 Specification

8.1 Technical Summary

Maximum hoist capacity 200kg (400kg for OT400)

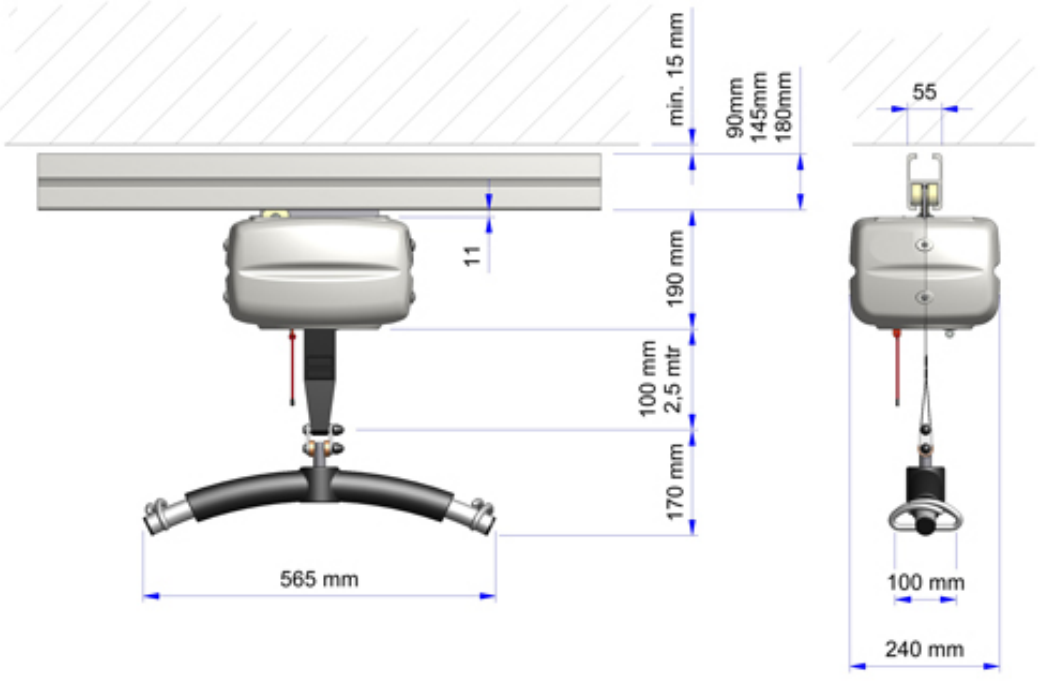

Sound pressure level 47 dB (A)

IP rating 54
Duty cycle 10%
Hoist motor 24Vdc 9,5 A max
Drive motor 24Vdc 2.1A max
2x Battery 2x 12V 5AH
Manual control 6 functions - IP65
Electrical hanger bar 24Vdc - 5.5 A maximum

Battery
Switching power supply energy efficient
Primary 240V AC 50/60Hz
Secondary 27.6 Vdc - 1.5 A maximum.
IP62, EN60601-1

Gate
Sound Level 58dB (A)
IP rating 54
Duty cycle 10%
Operating voltage 24 Vdc



Turntable
Sound pressure level 60 dB (A)
IP rating 54
Duty cycle 10%
Operating voltage 24 Vdc



Junction
Sound Level 55dB (A)
IP rating 54
Duty cycle 10%
Operating voltage 24 Vdc



The expected life of the OT200s, in normal use under normal conditions and apart from slings, slings and batteries, is 10 years (100,000 transfers) for maintenance according to specifications.

Use of the OT200 in a humid environment or in an environment with aggressive vapours are not "normal circumstances" and can shorten the life of components. If the motor is used in such environment please ask for our Humid Environment Upgrade.

9 Warranty statements

- OpeMed gives a 1 year warranty on the OT200/OT400. OpeMed does not give warranty on any parts that are exposed to wear, like wheels, slings, hoisting belts or batteries.
- This warranty does not apply to damage or failure of the OT200/OT400 which is caused by improper or un-professional use or repairs done by others than OpeMed. The judgement on this part lies with OpeMed or an by OpeMed appointed representative.
- The Warranty is invalid if the OT200 has been serviced by a non-authorised OpeMed body.
- OpeMed is free to change the product in any way, also not according to this manual. OpeMed does not need to inform the client of this in any way.

10 About OpeMed

Transferring and lifting caretakers in the health care sector asks a lot of energy and high professionalism from several parties and especially from carers. OpeMed delivers services and products for people who are involved daily with these transfers. The mobility of the caretaker is our starting point: together with the caretakers and carers, we develop solutions to improve or maintain the caretaker's mobility.
By taking into account and using the moving possibilities of the caretaker we aim at delivering an optimal quality of care and an improvement of labour conditions for the carer.

OpeMed can deliver the following products/services:

- Hoists
- Standing aids
- Bed hoists
- Ceiling hoists
- Accessories for transfer aids
- High-low baths
- Toilet and shower chairs
- Shower trolleys
- Other transfer aids
- Training and advise

The vision, services and products of OpeMed make OpeMed the perfect partner for carers and caretakers.

10.1 Contact Details

Astor Bannerman
The Elephant Works
Andoversford Link, Cheltenham
GL54 4L
United Kingdom
T: +44 (0)1242 820820

E: sales@astorbannerman.co.uk
W: www.astorbannerman.co.uk

We : United Care Products B.V.
Bremenweg 5
9723 TC, Groningen
The Netherlands

Hereby declare under our own responsibility that the class I medical device:

OT200 / OT400 ceiling hoist system and associated components

meets all applicable requirements of the **Directive 93/42/EEC**

and complies with the following standards or other normative documents:

- **NEN-EN-ISO 14971**
- **ISO 10535**
- **NEN-EN-60601-1**
- **NEN-EN-60601-1-2 (EMC)**
- **NEN-EN-ISO 15223:2012**
- **NEN-EN 12182:2012**

On behalf of United Care Products B.V.

Place and date: Groningen, 25 October 2018
Name and function: J. Stevenson

Signature

CE

12 Notes



Tel: 01242 820820 Email: sales@astorbannerman.co.uk

www.astorbannerman.co.uk

Astor Bannerman, The Elephant Works, Andoversford Link, Cheltenham GL54 4LB

Astor Bannerman manufactures and installs high-quality ceiling hoists and patient handling equipment for the hospital, nursing home and domestic environment